GLASS DOOR PANEL ADJUSTMENT INSTRUCTIONS

www.andres.glass



The instruction applies to the adjustment of the following door models:
Premium, Lux, Lux Black, Benelux, Benelux Black, Comfort, Modern, Modern Black, AU Premium, AU Premium Black, AU Lux, AU Lux Black, AU Benelux, AU Benelux Black, AU Comfort, Dory, Dory Black, Dorado, Dorado Black.

Be careful when working with a glass door! During installation and adjustment, ensure that the edges and especially the corners of the glass door do not come into contact with the floor! Place a rug or soft material between the door and the floor to protect the glass. Wear safety glasses and gloves during installation and adjustment to prevent the door or glass from sliding! The manufacturer is not responsible for glass damage during or after installation.

NB!
Adjustment of the door glass and hinges is done by two people.

- One person holds the glass sheet at all times, observing its position.
- Another person is engaged in the partial disassembly and assembly of the hinges.
- Do not fully unscrew the screws holding the glass.
- The use of an electric screwdriver when turning the screws (3) is not recommended to avoid damaging the screw heads.
- The eccentric (6), which is located between the opening of the upper hinge and the opening of the lower hinge of the glass sheet (D-16 mm), allows the glass to be moved up-down and left-right by 4-5 mm. The lower hinge has a safety ring (4).
- The depth of the glass sheet is not adjustable.
- The minimum permissible distance (A) between the glass and the base of the hinges is 1 mm.

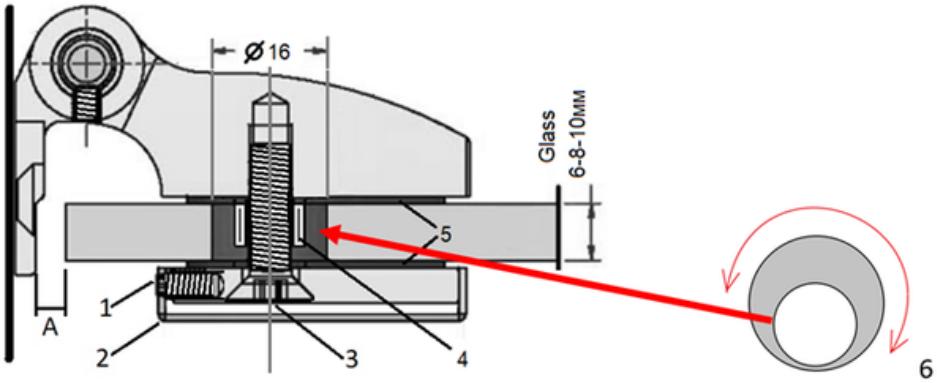

Instructions for adjusting the glass sheet to the hinges corresponding to the system shown in the figure:
1. Tighten the internal screws (1) on the rear sides of the hinges with the appropriate size hex key.
2. Remove the decorative coverings on the bumper cover (2). If the cover is glued, it is necessary to loosen and remove it very carefully.
3. Loosen (do not unscrew completely) the screw (3) on the lower hinge with the appropriate size hex key.
4. Remove the screw (3) from the upper hinge, keeping the glass firmly in place at all times!
5. Adjust the glass sheet, ensuring even gaps between the door frame and the edge of the glass (3-5 mm).
6. Fasten the glass sheet in the desired position with screws (3) with a torque of 10-15 Nm. If the glass needs frequent adjustment, check the integrity of the hinge seals (5) and their tight fit on the glass.
7. Make sure the glass is properly adjusted, and the edges do not touch the door frame.
8. Reinstall the decorative covers and secure them by tightening the screws (1).
9. Do not forget to regularly lubricate the moving parts of the hinge and lock.

Andres Glass Solutions hopes that you will pay attention to the care of our products, ensuring their longevity, which will bring you joy for many years to come!